Publication PS 17

Farnell

F range power supplies

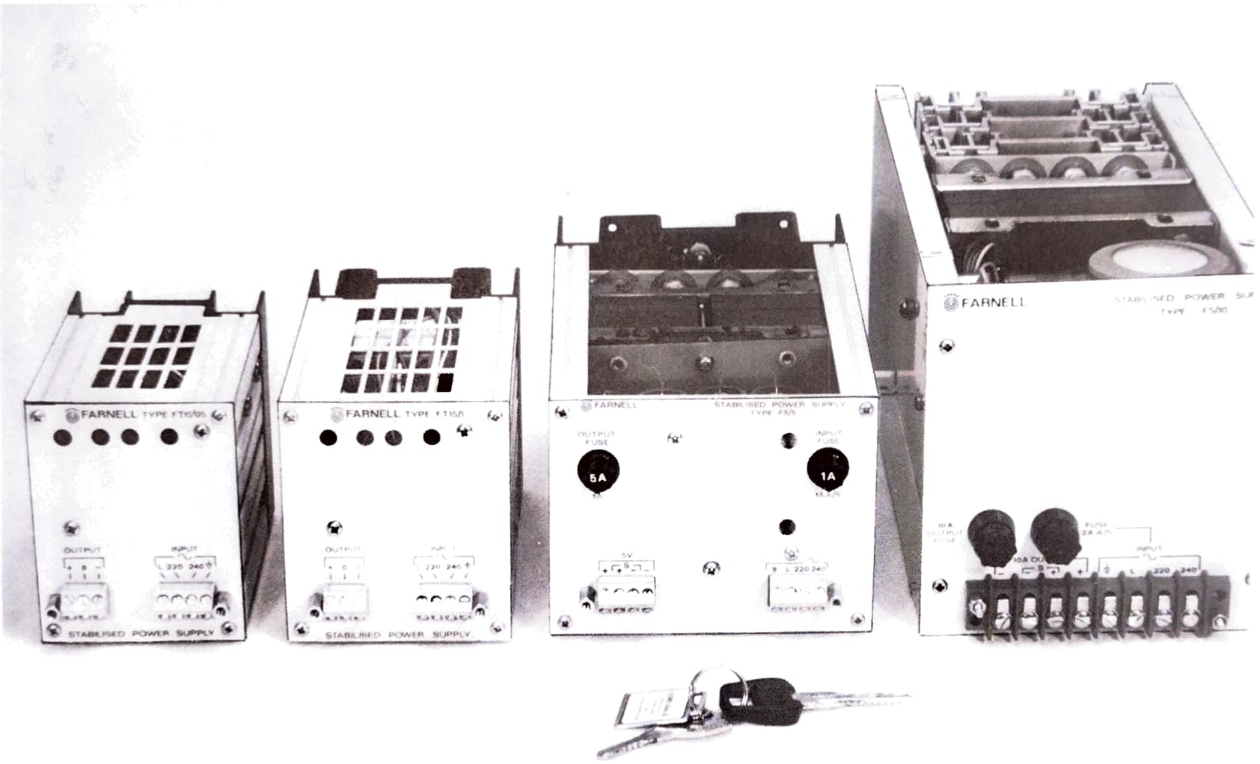

Low Cost

Compact Design
All units under 5¼″ panel height

Quality Components

Good Performance

High M.T.B.F.

Ideal for O.E.M.

The F range power supplies are low cost, compact units ideal for O.E.M. use. They accept a nominal a.c. mains input and provide a regulated d.c. output – single, dual and triple output versions being available.

The 5V single output units are suitable for general applications; for example, as power sources for low frequency CMOS/TTL I/C logic systems as used in digital instruments, remote monitoring equipment, computer peripherals etc., where reasonable noise immunity is required. 12V and 15V (5-15V) models are available for similar use in industrial control applications where a higher noise immunity over-rides the need for minimum current consumption. The 12, 15, 24 and 30V models are of course suitable for a wide range of purposes.

Dual output units, nominally 15-0-15V, are provided for powering operational amplifiers. The outputs are floating with respect to earth and are adjustable 12-15V. One output tracks the other and the amount of offset between them can be varied within the adjustment range.

Triple output units complete the range and provide, in one package, a 5V output together with 15-0-15V, for systems with mixed IC's and Op. amps.

All the 5V models feature built-in overvoltage crowbar protection. Overload and short circuit protection is ensured by foldback current limiting which helps to minimise heat dissipation. All models have mains and output fuses.

The F range power supplies are a cost/effective solution to the original equipment manufacturer's dilemma – to build or buy? Quality components and optimised design and production techniques have been combined to ensure reliability and dramatically lower costs. Further discounts are available on quantities of 10 off or more.

Units available

Single output units

Nominal d.c. output	Trim range	Current	Crowbar	Package	Model number
5V	±0.5V	3A	YES	B	F5–3
5V	±0.5V	5A	YES	C	F5–5
5V	±0.5V	10A	YES	D	F5–10
12V	±0.5V	5A	NO	C	F12–5
15V	5–15V	1A	NO	A	F15–1
15V	5–15V	2A	NO	B	F15–2
24V	±0.5V	2A	NO	C	F24–2
24V	±0.5V	5A	NO	D	F24–5
30V	15–30V	0.5A	NO	A	F30–05
30V	15–30V	1A	NO	B	F30–1

Twin output units

15–0–15V	12–15V	0.5A	NO	A	FT15–05
15–0–15V	12–15V	1A	NO	B	FT15–1
15–0–15V	12–15V	2A	NO	C	FT15–2

Triple output units

5V and	±0.5V	5A	YES	C	FP5–5
15–0–15V	12–17V	0.2A	NO		
5V and	±0.5V	10A	YES	D	FP5–10
15–0–15V	12–17V				

Specification

MAINS INPUT — A.C. Mains 220, 240V, 50Hz 110,

MAINS VARIATION TOLERATED — ±10%

OUTPUT — Voltage and current rating and package size shown in table

LOAD REGULATION
(Output change for a zero to full load change) — 5mV (single outputs) 10mV (twin outputs)

LINE REGULATION
(Output change for a ± 10% mains change) — 5mV (single outputs) 10mV (twin outputs)

RIPPLE — 3mV pk-pk (singles)
2mV (twins)

TEMPERATURE COEFFICIENT — 0.02% per °C typical

AMBIENT OPERATING TEMPERATURE RANGE — 0 to 60°C

STORAGE TEMPERATURE RANGE — –40°C to +75°C

Dimensions (mm)

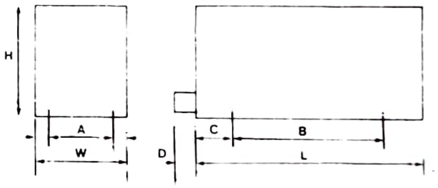

N.B. Combine single and twin specs. for triple output units

PACKAGE	H	W	L	A	B	C	D	FIXING SCREWS Max.	WEIGHT kg.
A	90	72	121.5	59.3	68	12	14	M3 x 6	1.3
B	90	81	148	68.3	88	12	14	M3 x 6	2
C	70	117	210	104.3	104	41	14	M3 x 6	3.6
D	132	125.5	263	113	200	41	18	No 6 x 16 Self tap	5.9

Correction: Package C height should read 90

Represented by:

Manufactured in England by

FARNELL INSTRUMENTS LIMITED
SANDBECK WAY, WETHERBY,
WEST YORKSHIRE LS22 4DH
TELEPHONE 0937-3541 TELEX 557294

LONDON OFFICE TEL: 01-864 7433 and 7434

Specifications Subject to Change Without Prior Notice.

Printed in England

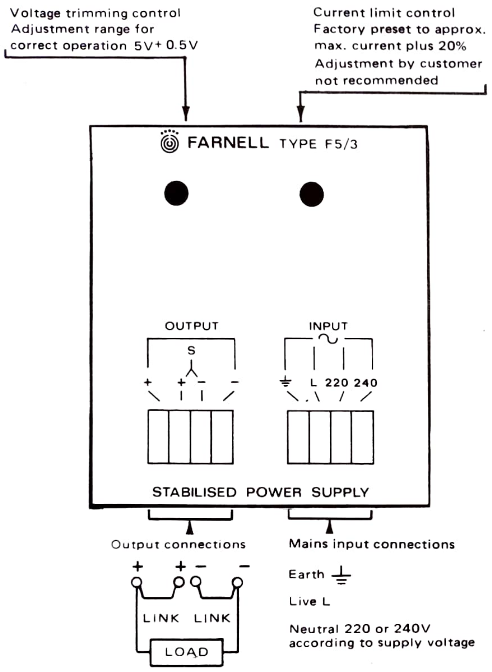

Manufactured in England by

FARNELL INSTRUMENTS LIMITED

SANDBECK WAY, WETHERBY,

WEST YORKSHIRE LS22 4DH

TELEPHONE 0937-3541 TELEX 557294

LONDON OFFICE TEL : 864 7433 and 7434

Specifications Subject to Change Without Prior Notice.

F5/3 F range power supply

Dimensions/fixing centres (mm)

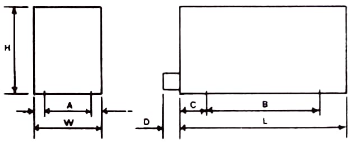

This model is in package B

PACKAGE	H	W	L	A	B	C	D	FIXING SCREWS Max.	WEIGHT kg.
A	90	72	121·5	59·3	68	12	14	M3 X 6	1·3
B	90	81	148	68·3	88	12	14	M3 X 6	2
C	90	117	210	104·3	104	41	14	M3 X 6	3·6
D	132	125·5	263	113	200	41	18	No. 6 X 16 Self tap.	5·9

Specification

MAINS INPUT	A.C. Mains 220, 240V, 50Hz 110, 120V to special order
MAINS VARIATION TOLERATED	±10%
OUTPUT	5V, 3A
LOAD REGULATION (Output change for a zero to full load change)	<5mV
LINE REGULATION (Output change for a ± 10% mains change)	<5mV
RIPPLE	<3mV pk-pk
TEMPERATURE COEFFICIENT	0.02% per °C typical
AMBIENT OPERATING TEMPERATURE RANGE	0 to 60°C
STORAGE TEMPERATURE RANGE	−40°C to +75°C

USED ON	DRG. No. 3ZV0778101																			
	R		100	1,2	3,4	8,5,6,7	9		12	10,11	13		14,15	16,17	101,102	103	106			R
	C	100	101,102	1	8	2		4,7,3			5	9		6					105	C
	VT										1	2			100	101				VT
	MISC	F100 MT100	D100,101 , 102,103	Z1	P1		IC1	F101	Z2	Z3	P2			Z4	SCR100					MISC

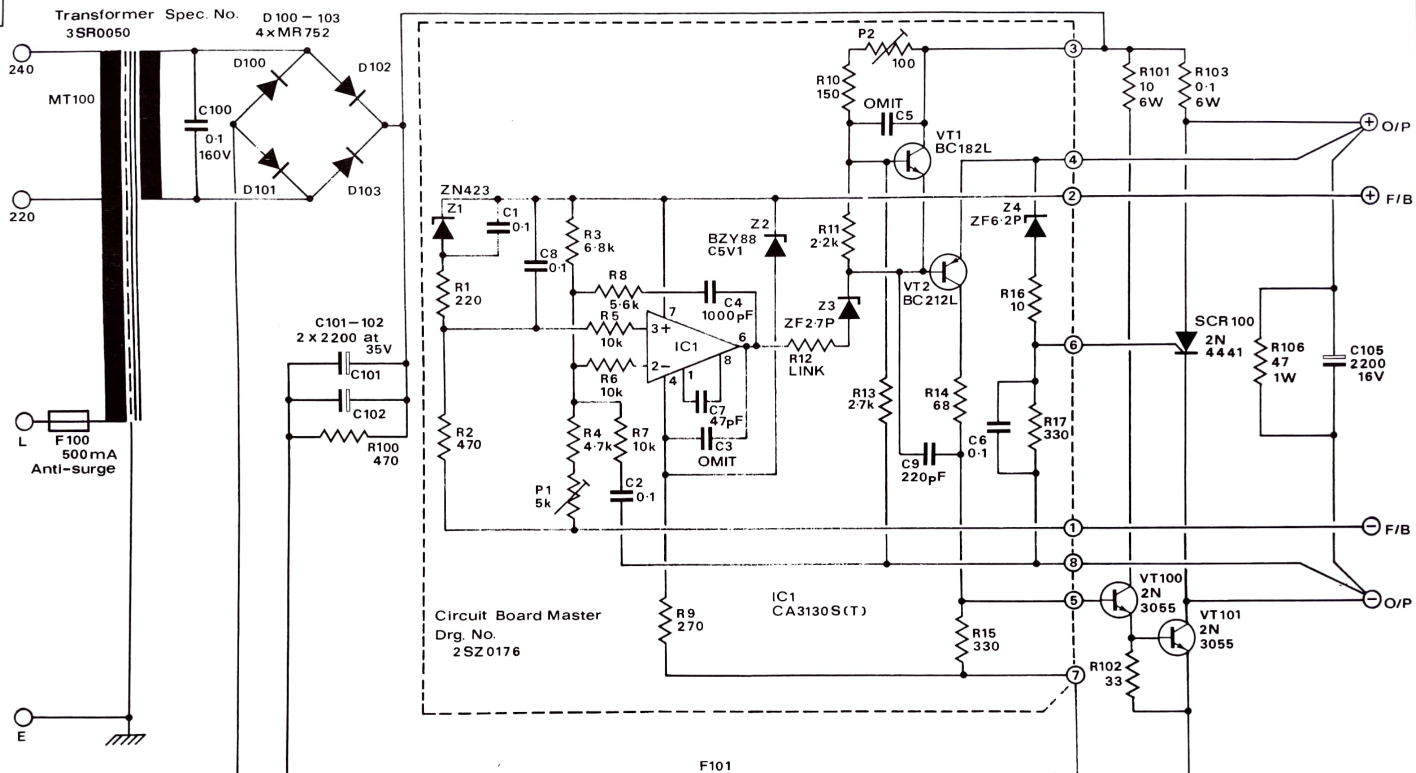

All Components Numbered From 100 Are Not On The Circuit Board

TRACED									
CHECKED	IRB	B	9.8.76	Q3960					
DRAWN	P.B.	ISS.	DATE	MOD. No.					
		A	15·6·76						

NOTE :—
CAPACITOR VALUES GIVEN IN µF.
RESISTOR VALUES IN Ω
(2) REFERS TO CCT. BD, PIN CONNECTION Nos.

FARNELL INSTRUMENTS LTD. WETHERBY, YORKS.

Circuit Diagram/Connection Diagram F5/3

DRAWING No. 3ZV0778101

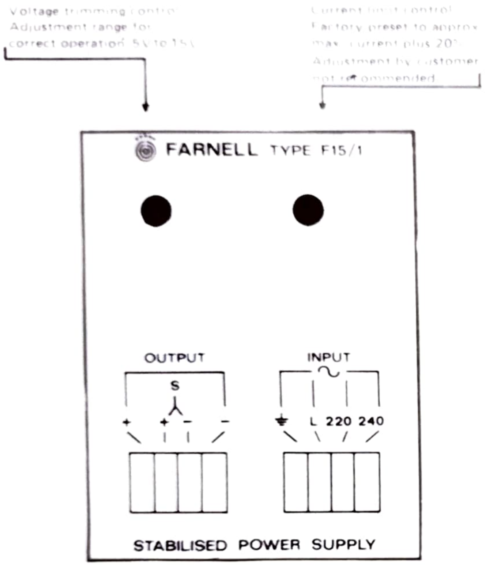

Output connections

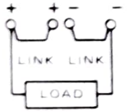

Mains input connections

Earth ⏚

Live L

Neutral 220 or 240V
according to supply voltage

Manufactured in England by

FARNELL INSTRUMENTS LIMITED
SANDBECK WAY, WETHERBY,
WEST YORKSHIRE LS22 4DH
TELEPHONE 0937-3541 TELEX 557294
LONDON OFFICE TEL 01-864 7433 and 7434

Specifications Subject to Change Without Prior Notice

F15/1 F range power supply

Dimensions/fixing centres (mm)

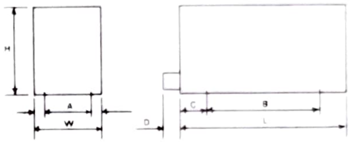

This model is in package A

PACKAGE	H	W	L	A	B	C	D	FIXING SCREWS Max.	WEIGHT kg.
A	90	72	121·5	59·3	68	12	14	M3 x 6	1·3
B	90	81	148	68·3	88	12	14	M3 x 6	2
C	90	117	210	104·3	104	41	14	M3 x 6	3·6
D	132	125·5	263	113	200	41	18	No. 6 x 16 Self tap.	5·9

Specification

MAINS INPUT	A.C. Mains 220, 240V, 50Hz 110, 120V to special order
MAINS VARIATION TOLERATED	±10%
OUTPUT	15V, 1A
LOAD REGULATION (Output change for a zero to full load change)	<5mV
LINE REGULATION (Output change for a ± 10% mains change)	<5mV
RIPPLE	<3mV pk-pk
TEMPERATURE COEFFICIENT	0.02% per °C typical
AMBIENT OPERATING TEMPERATURE RANGE	0 to 60°C
STORAGE TEMPERATURE RANGE	−40°C to +75°C

USED ON	V0766101		
		R	100 1,2 3,4 8,5,6,7 9 12 10,11 13 14,15 16,17 101,102 103 106
		C	100 101,102 1 8 2 7,4,3 5 9 6 105
		VT	1 2 100 101
		MISC	F100 MT100 D100,101 102,103 Z1 P1 IC1,F101 Z2 Z3 P2 Z4

DP

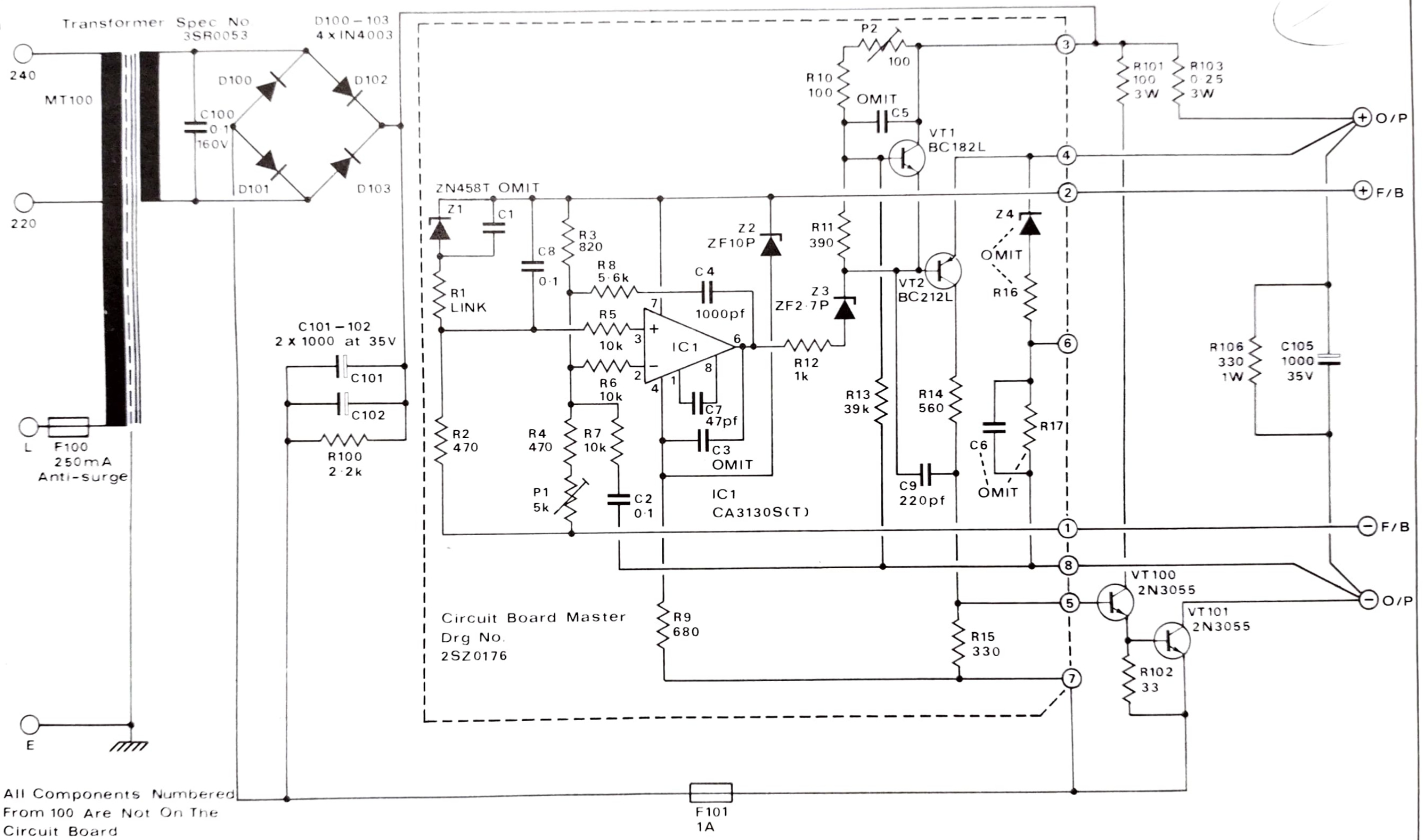

All Components Numbered
From 100 Are Not On The
Circuit Board

TRACED			
CHECKED	IKC	B	23-8-76 23953
DRAWN	P.B.	ISS	DATE MOD No
		A	16-6-76

NOTE –
CAPACITOR VALUES GIVEN IN μF
RESISTOR VALUES IN Ω
(2) REFERS TO CCT BD. PIN CONNECTION Nos

FARNELL INSTRUMENTS LTD. WETHERBY, YORKS.

Circuit / Connection Diagram   F15/1

DRAWING No
3ZV0766101

B.A.F. L/1765/60

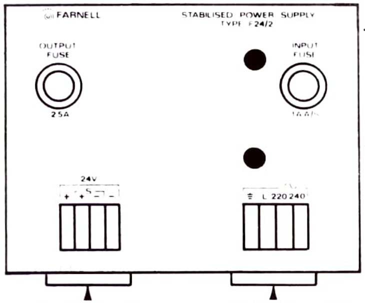

Voltage trimming control
Adjustment range for
correct operation 24V±0.5V

Current limit control
Factory preset to approx
max. current plus 20%
Adjustment by customer
not recommended

Output connections

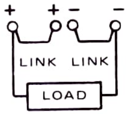

Mains input connections

Earth ⏚

Live L

Neutral 220 or 240V
according to supply voltage

Manufactured in England by

FARNELL INSTRUMENTS LIMITED
SANDBECK WAY, WETHERBY,
WEST YORKSHIRE LS22 4DH
TELEPHONE 0937-3541 TELEX 557294
LONDON OFFICE TEL: 01-864 7433 and 7434

Specifications Subject to Change Without Prior Notice.

F24/2 F range power supply

Dimensions/fixing centres (mm)

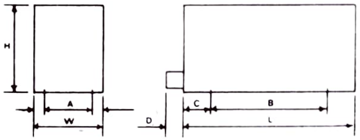

This model is in package C

PACKAGE	H	W	L	A	B	C	D	FIXING SCREWS Max.	WEIGHT kg.
A	90	72	121·5	59·3	68	12	14	M3 x 6	1·3
B	90	81	148	68·3	88	12	14	M3 x 6	2
C	70	117	210	104·3	104	41	14	M3 x 6	3·6
D	132	125·5	263	113	200	41	18	No. 6 X 16 Self tap.	5·9

Specification

MAINS INPUT	A.C. Mains 220, 240V, 50Hz 110, 120V to special order
MAINS VARIATION TOLERATED	±10%
OUTPUT	24V, 2·5A.
LOAD REGULATION (Output change for a zero to full load change)	<5mV
LINE REGULATION (Output change for a ± 10% mains change)	<5mV
RIPPLE	<3mV pk-pk
TEMPERATURE COEFFICIENT	0.02% per °C typical
AMBIENT OPERATING TEMPERATURE RANGE	0 to 60°C
STORAGE TEMPERATURE RANGE	−40°C to +75°C

DRG No 3ZV0804101			
	R	100 1 2 3 4 5 6 7 8 9 12 11 10 13 14 15 16 17 101 102 103 104 106 105	R
	C	100 101 102 103 104 1 8 2 4 7 3 5 9 6 105	C
	VT	1 2 100 101 102	VT
	MISC	F100 MT 100 D100 101 102 103 Z1 P1 IC1 F101 Z2 Z3 P2 Z4	MISC

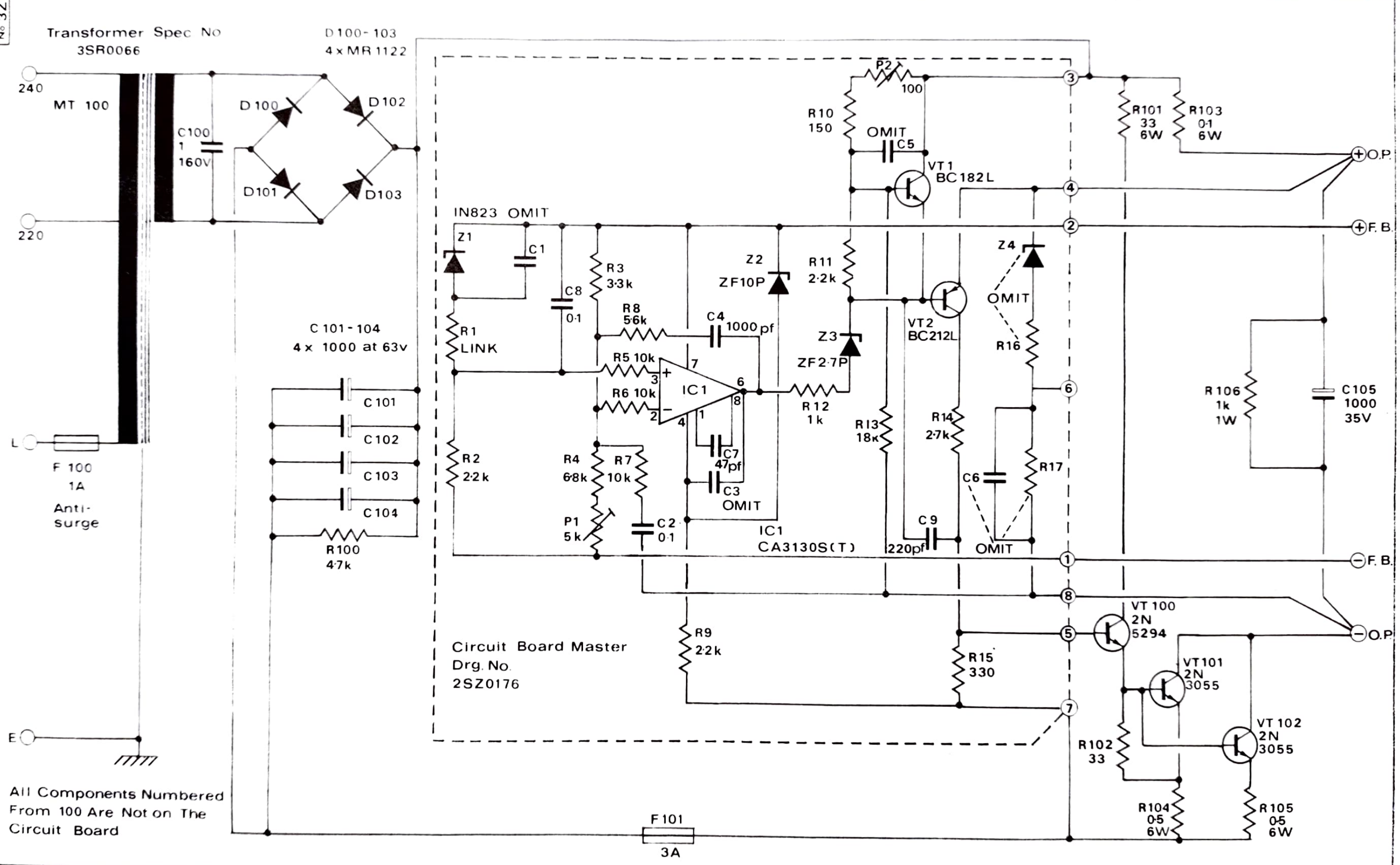

TRACED				
CHECKED				
DRAWN	K-L P	ISS	DATE	MOD No
		A	22 9 76	

NOTE
CAPACITOR VALUES GIVEN IN µF
RESISTOR VALUES IN Ω
(2) REFERS TO CCT BD PIN CONNECTION Nos

FARNELL INSTRUMENTS LTD. WETHERBY, YORKS.

CIRCUIT / CONNECTION DIAGRAM F 24/2

DRAWING No 3ZV0804101

Key to controls

A Master current limit control
B Master output voltage control
C Slave output voltage control
D Slave current limit control

Set - up procedure

1. Use master control B
to set negative output voltage
(permissible range - 12 to - 15V)

2. Use slave control C
to set positive output voltage

3. Use master control B
for tracking adjustment

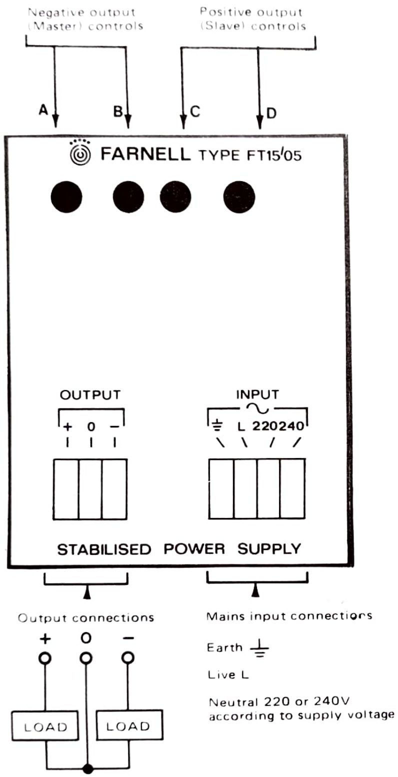

The current limit controls A and D
are factory preset to approx. max.
current plus 20%
Adjustment by customer not recommended

Manufactured in England by

FARNELL INSTRUMENTS LIMITED
SANDBECK WAY, WETHERBY,
WEST YORKSHIRE LS22 4DH
TELEPHONE 0937-3541 TELEX 557294
LONDON OFFICE TEL: 01-864 7433 and 7434

Specifications Subject to Change Without Prior Notice.

FT15/05 F range power supply

Dimensions/fixing centres (mm)

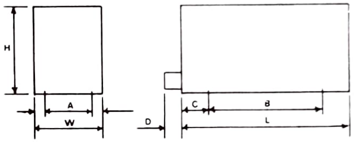

This model is in package A

PACKAGE	H	W	L	A	B	C	D	FIXING SCREWS Max.	WEIGHT kg.
A	90	72	121·5	59·3	68	12	14	M3 x 6	1·3
B	90	81	148	68·3	88	12	14	M3 x 6	2
C	90	117	210	104·3	104	41	14	M3 x 6	3·6
D	132	125·5	263	113	200	41	18	No. 6 X 16 Self tap.	5·9

Specification

MAINS INPUT	A.C. Mains 220, 240V, 50Hz 110, 120V to special order
MAINS VARIATION TOLERATED	±10%
OUTPUT	15-0-15V, 0.5A
LOAD REGULATION (Output change for a zero to full load change)	<10mV
LINE REGULATION (Output change for a ± 10% mains change)	<10mV
RIPPLE	<2mV pk-pk
TEMPERATURE COEFFICIENT	0.02% per °C typical
AMBIENT OPERATING TEMPERATURE RANGE	0 to 60°C
STORAGE TEMPERATURE RANGE	−40°C to +75°C

USED ON

DRG No 3ZV0767101

R	1 4 3 2 6 10,8,5,7,9,100,101,13,11 12,14,15,16 17 18 19 20 102 103	R
C	1 100 101 5 3 4 2 8 9 6 7	C
VT	1 2 3 4 100 101	VT
MISC	F100,MT100,D100,101,102,103,104,105,106,107,D1,Z1,2 IC2 IC1 P1,2 F101,102 D2,3 P3,4	MISC

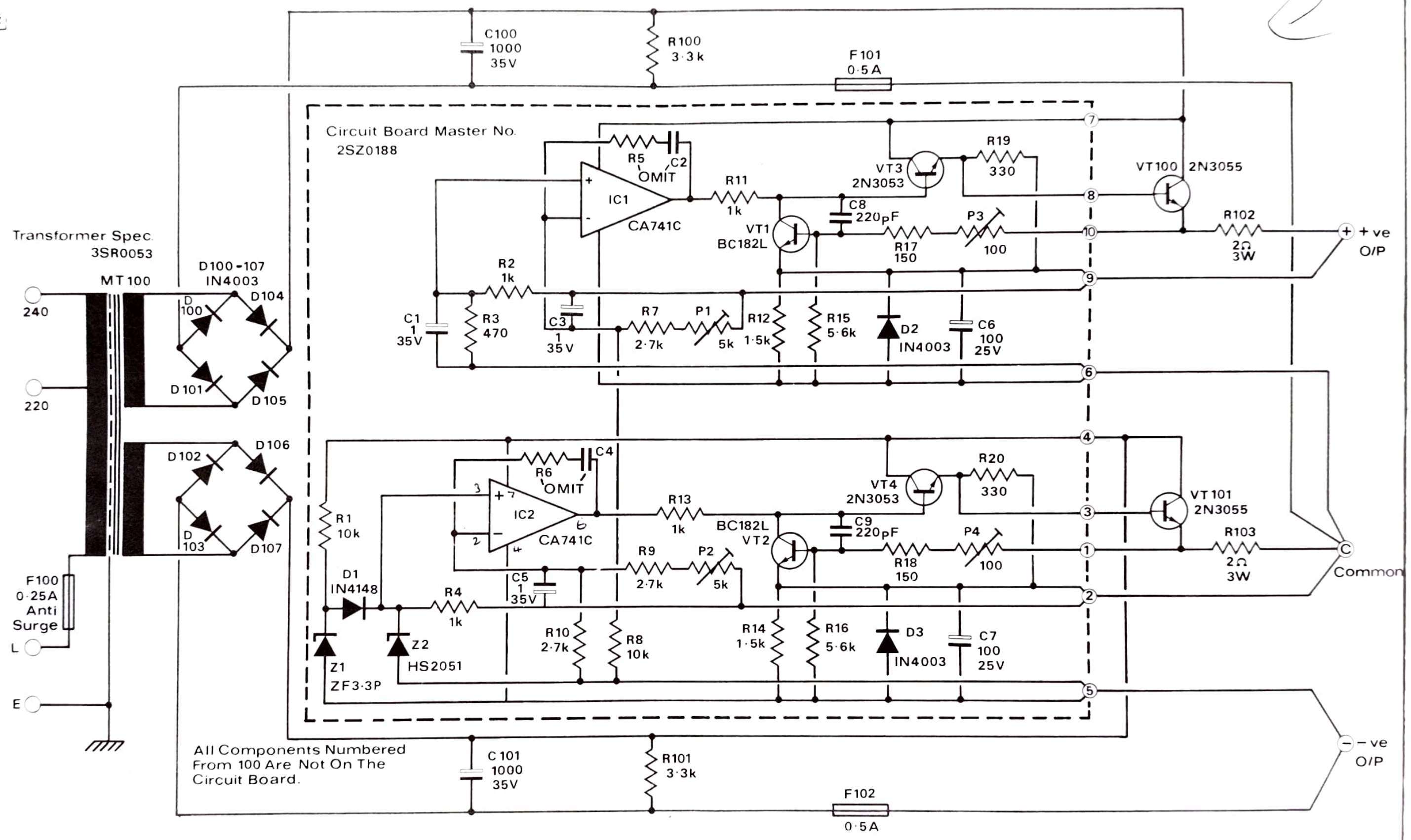

All Components Numbered From 100 Are Not On The Circuit Board.

TRACED				
CHECKED	TKB			
DRAWN	SA	ISS	DATE	MOD No
		A	22-4-76	

NOTE –
CAPACITOR VALUES GIVEN IN µF
RESISTOR VALUES IN Ω
(2) REFERS TO CCT BD. PIN CONNECTION Nos

FARNELL INSTRUMENTS LTD. WETHERBY, YORKS.

Connection/Circuit Diagram FT15/0·5

DRAWING No 3ZV0767101

Key to controls:-

A Master current limit control
B Master output voltage control
C Slave output voltage control
D Slave current limit control

Set–up procedure:-

1. Use master control B
to set negative output voltage
(permissible range –12 to –15V)

2. Use slave control C
to set positive output voltage

3. Use master control B
for tracking adjustment

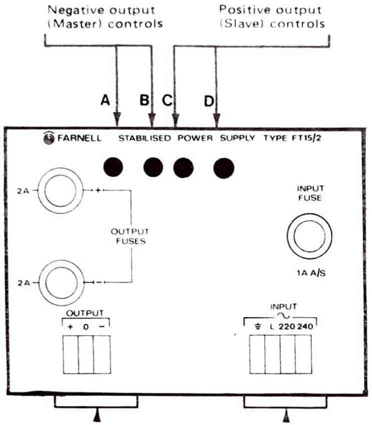

Output connections

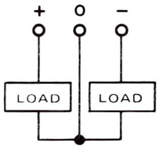

Mains input connections

Earth ⏚

Live L

Neutral 220 or 240V
according to supply voltage

The current limit controls A and D
are factory preset to approx. max.
current plus 20%
Adjustment by customer not recommended

Manufactured in England by

FARNELL INSTRUMENTS LIMITED
SANDBECK WAY, WETHERBY,
WEST YORKSHIRE LS22 4DH
TELEPHONE 0937-3541 TELEX 557294
LONDON OFFICE TEL [illegible]-864 7433 and 7434

Specifications Subject to Change Without Prior Notice.

FT15/2 F range power supply

Dimensions/fixing centres (mm)

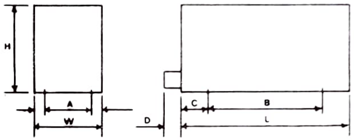

This model is in package C

PACKAGE	H	W	L	A	B	C	D	FIXING SCREWS Max.	WEIGHT kg.
A	90	72	121·5	59·3	68	12	14	M3 X 6	1·3
B	90	81	148	68·3	88	12	14	M3 X 6	2
C	90	117	210	104·3	104	41	14	M3 X 6	3·6
D	132	125·5	263	113	200	41	18	No. 6 X 16 Self tap.	5·9

Specification

MAINS INPUT	A.C. Mains 220, 240V, 50Hz 110, 120V to special order
MAINS VARIATION TOLERATED	±10%
OUTPUT	15-0-15V, 2A
LOAD REGULATION (Output change for a zero to full load change)	<10mV
LINE REGULATION (Output change for a ± 10% mains change)	<10mV
RIPPLE	<2mV pk-pk
TEMPERATURE COEFFICIENT	0.02% per °C typical
AMBIENT OPERATING TEMPERATURE RANGE	0 to 60°C
STORAGE TEMPERATURE RANGE	–40°C to +75°C

DRG No 3ZV0807101

R		1	4 3	2	6	10	8,5,100,7,9,101,13,11	12,14,15,16		17,18	19,20		102,103	R
C	104105		1 100,101		5,102,103,3,4		2		8,9		6,7			C
VT								1,2		3,4		100,101		VT
MISC	F100,MT100,D100,101,102,103,104,105,106,107,Z1,D1,Z2			IC2		IC1	P1,P2		F101,102,D2,3		P3,P4			MISC

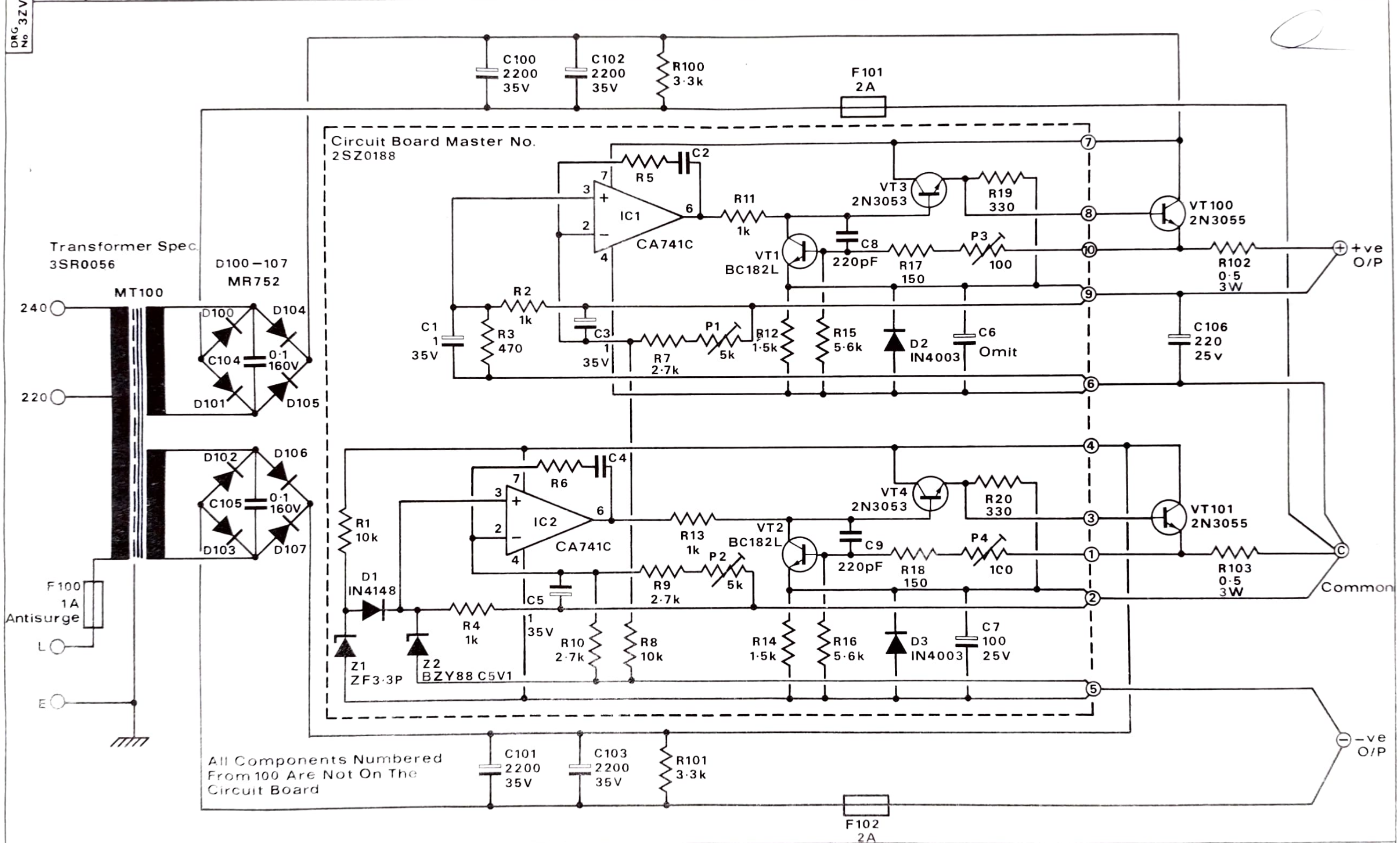

TRACED			
CHECKED		B	10 11 76	Q4038
DRAWN	P.B.	ISS.	DATE	MOD. No
		A	15·7·76	

NOTE —
CAPACITOR VALUES GIVEN IN µF
RESISTOR VALUES IN Ω
(2) REFERS TO CCT. BD. PIN CONNECTION Nos.
OMIT R5 R6 C2 C4

FARNELL INSTRUMENTS LTD. WETHERBY, YORKS.

Connection/Circuit Diagram

FT15/2

DRAWING No 3ZV0807101